SINGLE CAVITY SLIDER - RAW TYPE T10

FOR TIMBER DOOR

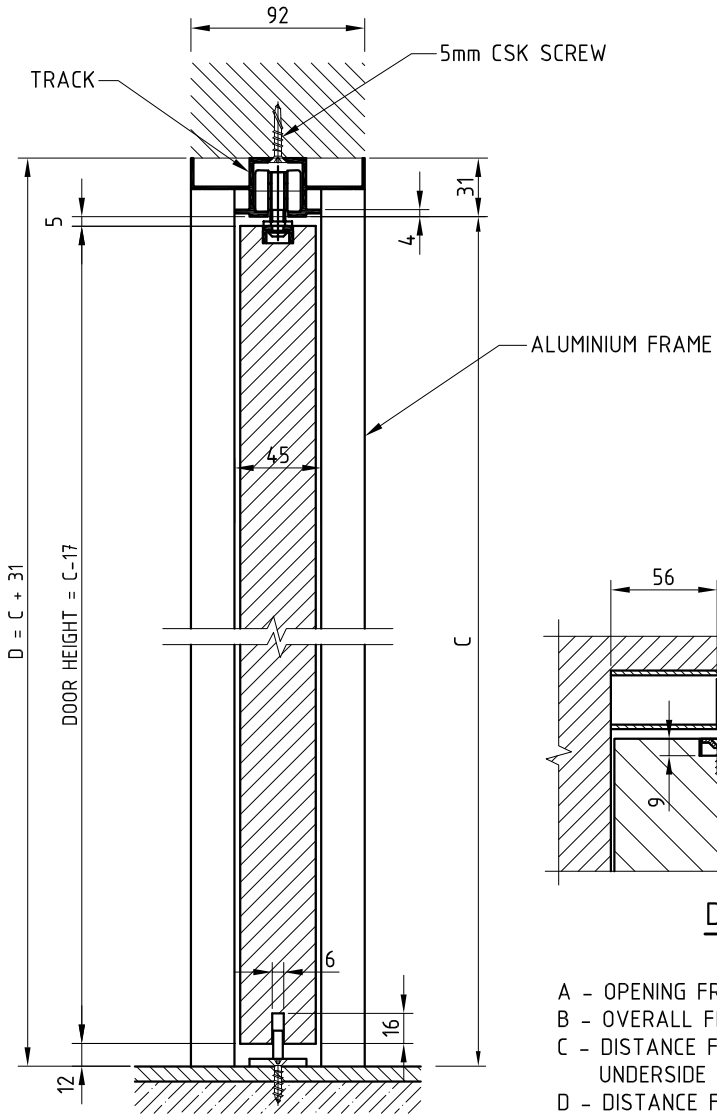

SECTION A - A

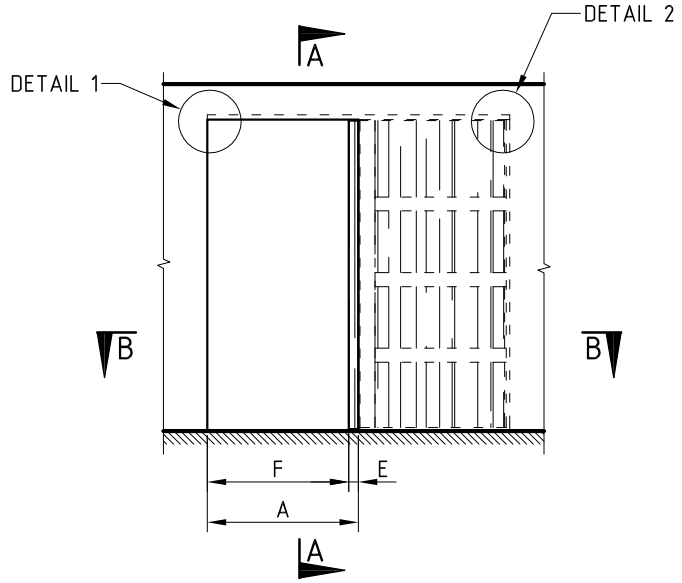

FRONT ELEVATION

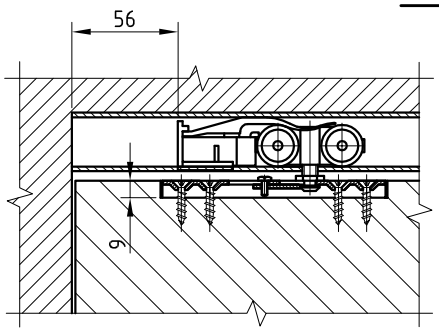

DETAIL 1

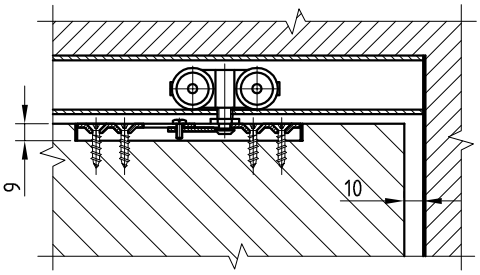

DETAIL 2

A - OPENING FRAME WIDTH.
B - OVERALL FRAME SIZE.
C - DISTANCE FROM FINISHED FLOOR TO UNDERSIDE OF TRACK.
D - DISTANCE FROM FINISHED FLOOR TO UNDERSIDE OF SUPPORT BEAM.
E - PROJECTION OF DOOR FROM CAVITY.
F - CLEAR OPENING WIDTH.
G - REVEAL THICKNESS TO BE CONFIRMED.

NOTES:
1. MAX. DOOR THICKNESS - 40mm.
2. MAX. DOOR WEIGHT - 100kg.
3. END JAMB - BY OTHERS.

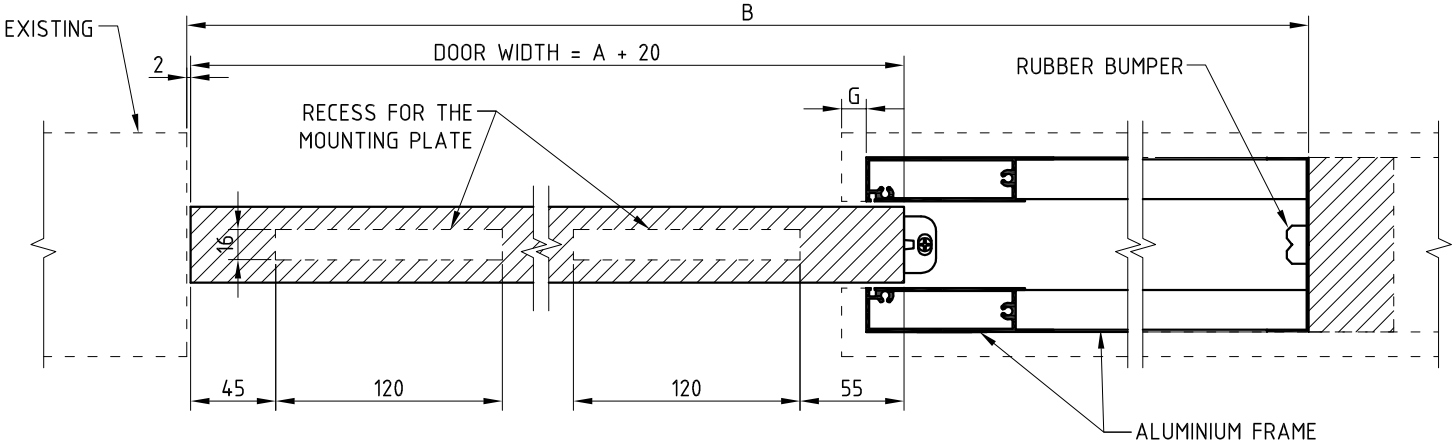

SECTION B - B

SMOOTH DOOR SYSTEMS

DIMENSION DATA NOT BINDING
WE RESERVE THE RIGHT TO ALTER SPECIFICATIONS WITHOUT NOTICE
COPYRIGHT SMOOTH DOOR SYSTEMS - ALL RIGHTS RESERVED

www.smoothdoors.com.au